Instruction Sheet
JMB-UMB-HD Universal Mobile Base

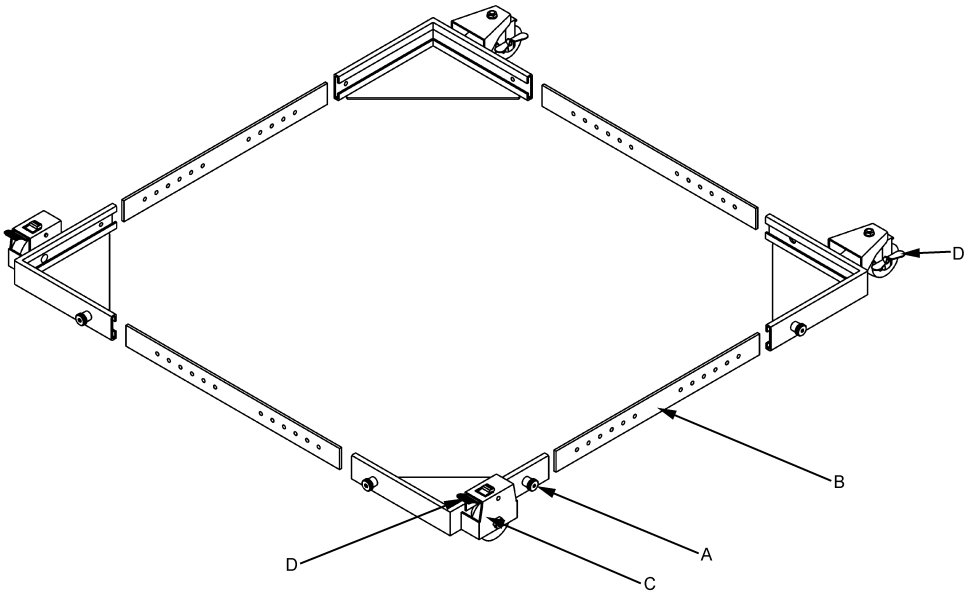

⚠ WARNING

All mobile base castors should be locked unless the machine is being moved. Do not move the mobile base while the machine has power, or is plugged in. All four mobile base castors should always be locked while the machine is being used.

1. Pull out the spring-loaded knob (A) and slide the side adjusting plate (B) into the castor bracket assembly (C).

2. Locate spring-loaded pin into one of the indexing holes found in the side adjusting plate.

3. Position the machine so that it rests evenly on the corner brackets.

4. Lock four castors by stepping on the brake pedals (D). Unlock by flipping the pedal up with your foot.

WMH TOOL GROUP
Consumer/Light Industrial Products Division
P.O. BOX 1349
Auburn, WA 98071-1349
Ph: 1-800-274-6848 ▪ Fax: 1-800-274-6840
E-mail: jet@wmhtoolgroup.com
www.wmhtoolgroup.com

M-708119 10/02
Copyright © WMH Tool Group

JMB-UMB-HD Parts Breakdown

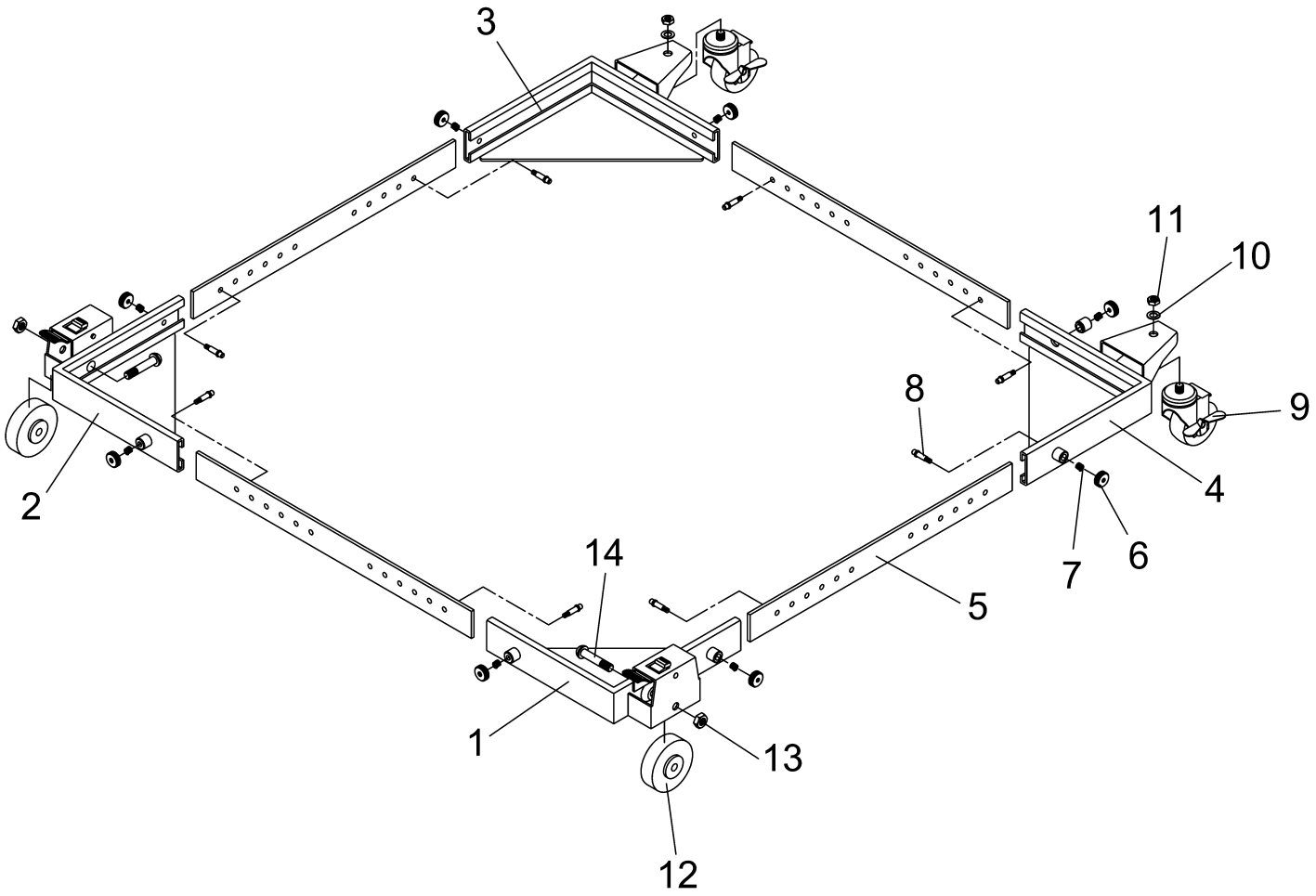

Part's List for the JMB-UMB-HD Universal Mobile Base

Index No.	Part No.	Description	Size	Qty.
1	JMBUMB-01HD	Fixed Castor Bracket - Right		1
2	JMBUMB-02HD	Fixed Castor Bracket - Left		1
3	JMBUMB-03HD	Swivel Castor Bracket - Left		1
4	JMBUMB-04HD	Swivel Castor Bracket - Right		1
5	JMBUMB-05HD	Side Adjusting Plate		4
	708116	Side Adjusting Plate	36”	
	708117	Side Adjusting Plate	50”	
6	JMBUMB-06	Knob		8
7	JMBUMB-07	Spring		8
8	JMBUMB-08	Index Pin		8
9	JMBUMB-09HD	Swivel Castor		2
10	TS-0720111	Lock Washer	1/2”	2
11	JMBUMB-11HD	Hex Nut	1/2”-12UNC	2
12	JMBUMB-12HD	Fixed Wheel		2
13	TS-0640091	Lock Nut	3/8”-16UNC	2
14	JMBUMB-14HD	Bolt (Special)	3/8” x 2-9/16”	2